CARLO GAVAZZI
Automation Components

CARLO GAVAZZI

Eos-Array and Eos-Box

An Innovative and Expandable Photovoltaic Management and Control Solution

Control

Sold by AA Electric 1-800-237-8274 • Lakeland, FL • Lawrenceville, GA • East Rutherford, NJ
Web : www.A-Aelectric.com Email: njsales@a-aelectric.com

CARE and DEDICATION:
Distinctive Features Provide Decisive Values
Eos-Array and Eos-Box:
An Innovative and Expandable Photovoltaic Management and Control Solution

Protecting the environment is a fundamental ideal that requires dedication and care, which is why every solar project is a vital project. It needs the same attention that we devote to the things we value most.

When developing the control system for photovoltaic plants, care and attention are essential values for Carlo Gavazzi. This ensures the solar investment is a solid investment.

The Carlo Gavazzi solution develops with the Eos-Array and the Eos-Box depending upon the requirements and complexity of the photovoltaic plant.

Eos-Array: is a system comprised of individual modular elements that, when interacting with one another, provide efficient local control to the solar plant. Whether it's a small/medium or high power plant, you are assured there is effective information management. The Eos-Array provides a compact, simple, versatile and innovative solution.

Eos-Box: is a web server that controls and supervises the whole installation, acquiring information from:

- Eos-Array groups
- Inverters
- Energy meters
- Interface protection

The Eos-Box provides information in a quick and automatic fashion via the internet, so the data is available wherever you are.

Sold by AA Electric 1-800-237-8274 • Lakeland, FL • Lawrenceville, GA • East Rutherford, NJ
Web : www.A-Aelectric.com Email: njsales@a-aelectric.com

Sold by AA Electric 1-800-237-8274 • Lakeland, FL • Lawrenceville, GA • East Rutherford, NJ
Web : www.A-Aelectric.com Email: njsales@a-aelectric.com

How can you protect your investment?

A solar installation, whether it's small or large is always an important investment.
You can protect your investment if:

- You **meet** the performance limits!
- You **know** the system is working properly!
- You **realize** the anticipated solar electric performance level!
- You **prove** that you've produced results!
- You **payback** the investment!

How much money will you lose if your solar system stops for three days?
To ensure you don't lose money — you need a CONTROL solution.

Reliable control requires independent control!

Providing you with dependable and accurate data, promptly advising when:

- The photovoltaic modules are not performing
- The photovoltaic modules are removed
- The inverter fails

Furthermore, focused control on every single string provides an immediate localization of the fault, thus significantly reducing the service time and the production downtime costs.

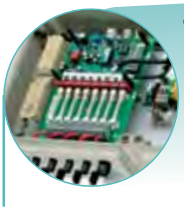

The major control solution today

- Has a fixed number of string controllers
- Is space consuming
- Is complex to wire
- Is difficult to repair when a failure occurs
- Has yield data available primarily from the inverter

Adding a control solution is now easy!

Existing

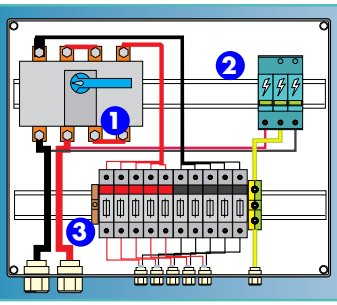

String Box:
1 DC Breaker
2 Surge Protection
3 Fuses

Retrofitted

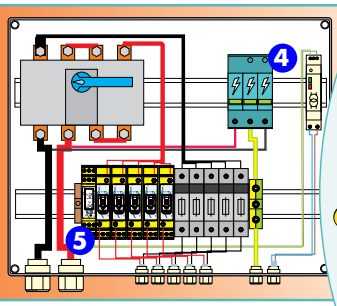

Advanced

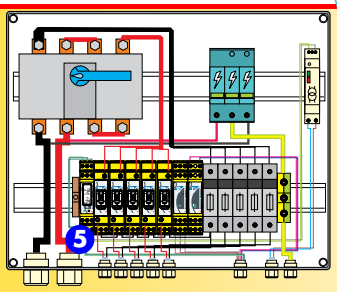

4 Power Supply
5 Eos-Array

Benefits

- String box with breaker, surge and fuse protection.
- A perceived low cost solution, which becomes very expensive in large installations, because of the long troubleshooting time and the relevant missed production.
- String box with breaker, surge and fuse protection with added measurement features.
- Replacement of standard "positive" fuse holders with similarly sized Eos-Array VMU-M and VMU-S solution provides a cost effective control without need for replacing the existing sting box.
- String box with breaker, surge and fuse protection with measurements of V-A-kW-kWh (VMU-S), the temperature of the PV cell, the air temperature, the power of solar irradiation and the speed of the wind (VMU-P) and extended control features (VMU-O).
- Full local variable measurement with data and local alarms, breaker(s) and surge protection status logging for an efficient and effective string and plant control.

Sold by AA Electric 1-800-237-8274 • Lakeland, FL • Lawrenceville, GA • East Rutherford, NJ
Web : www.A-Aelectric.com Email: njsales@a-aelectric.com

CARLO GAVAZZI

Versatile, a characteristic that makes work easier

The Eos-Array is modular and can be composed of: VMU-M the master unit and data logger; VMU-S the string controller; VMU-P the environment variable and VMU-O the I/O unit: a mixed combination of up 16 units in total.

Some tangible advantages:

- Measurement and control functions split into independent modules, thus improves the critical system reliability
- String efficiency and BOS efficiency measurement are fundamental parameters to evaluate the yield of the photovoltaic plant
- Local alarm management provides fast and easy identification

- Integrated fuse protection provides cost and installation time savings
- Easy application adaptability - the customer can choose according to their project philosophy which module(s) best fits into their application, thus giving them the freedom to find different solutions to their application problems
- Future expansion capability is based on usage of different modules and quantities, thus meeting application needs from small (10kWp) to large solar PV plants
- Multicolor LEDs provide immediate feedback on variables, alarms, fuse status and communication, showing the relevant details on the display

Information and control... everywhere

Features

- Cost effective yield efficiency and plant failure warning with additional manual or automatic database download for easy plant history analysis.
- Eos-Array control with local alarm output and with the additional possibility to be connected to a PC running free Eos-ArraySoft software.
- Notification of abnormal conditions as soon as they occur allows for prompt service intervention.
- Plant failure warning by means of GSM communication and proper SMS and plant database download by means of Eos-ArraySoft.
- Comprehensive control solution capable of showing efficiency, yield graphs and the management of any useful information which is accessible by the user from any place in the world simply by using his PC browser.
- Eos-Box embedded Pc-based WEB server gathers data from: Eos-Array(s), Inverter(s), Energy and Interface Protection(s).

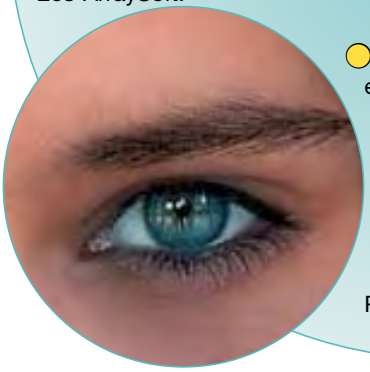

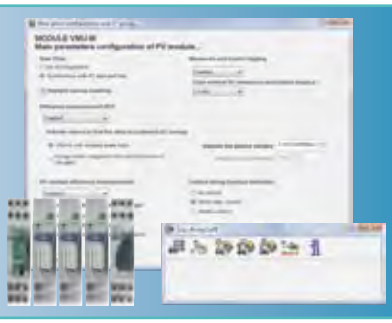

LOCAL

REMOTE

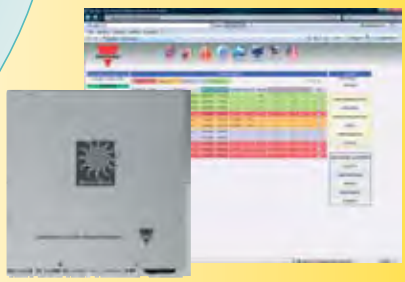

ADVANCED

Sold by AA Electric 1-800-237-8274 • Lakeland, FL • Lawrenceville, GA • East Rutherford, NJ
Web : www.A-Aelectric.com Email: njsales@a-aelectric.com

Solar Control

- Four RS485 ports
- Three USB 2.0 ports
- Two ethernet ports
- One VGA port
- One printer port
- One keyboard and mouse port
- 100 to 240VAC power supply
- Wall/DIN-rail mounting type

VMU-M: Local Bus Manager and Data Logger
- RS485 (Modbus) communication port
- Two generic temperature (Pt100/Pt1000, 3-wire) inputs or two digital inputs for contact status detection and energy counting
- Data stamping: date, time and V, A, W, Wh, PV cell temperature, air temperature. Time interval 1 to 60 minutes
- Events: variables, functions and system alarms
- Front 6-DGT LCD display
- 12 to 28 VDC power supply

VMU-S: String Controller
- Antitheft control
- Solar PV analysis (DC V, A and W metering)
- DC energy metering (Class 1)
- Accuracy ±0.5 RDG (V-A)
- Direct DC measurements up to 16A, max 1000VDC, max 800VDC to earth

VMU-P: Environment Variables Manager
- Two temperature (Pt100/Pt1000, 3-wire) inputs for cell and air temperature measurements
- One irradiation (120mV) input
- One wind speed (pulse) input

VMU-O: Local I/O
- Two digital inputs for trip protection detection and other purposes
- Two relay outputs for loads remote control

Versatility

* @ 9600bps. 10 min data logger time interval
** Depending on the inverter communication speed

From the Sun to the Earth, the Solar Energy Passes Through Carlo Gavazzi's Comprehensive Solution

WEB Server

- Plant information
- Plant map for failure localization
- Webcam management
- Real-time display with alarm indication
- Graphical and analytical yield trends
- Alarm and events logging

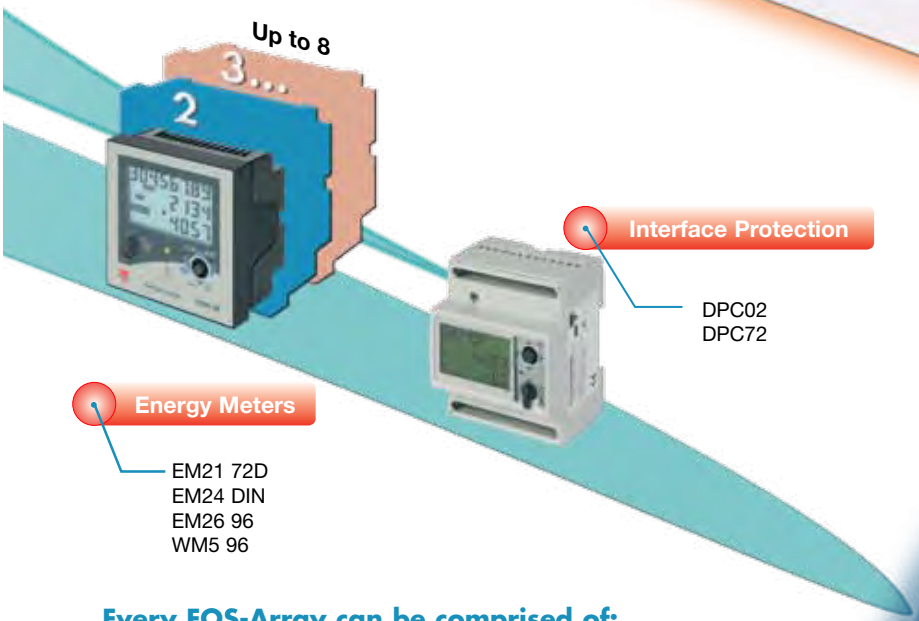

Interface Protection

DPC02
DPC72

Energy Meters

EM21 72D
EM24 DIN
EM26 96
WM5 96

Every EOS-Array can be comprised of:

1 VMU-M
Up to 15 VMU-S
Up to 7 VMU-O
Up to 1 VMU-P
...but not exceeding 16 units in total

Eos-Array

Sold by AA Electric 1-800-237-8274 • Lakeland, FL • Lawrenceville, GA • East Rutherford, NJ
Web : www.A-Aelectric.com Email: njsales@a-aelectric.com

The Complete Product Package

Inductive Proximity Sensors
Tripleshield™ Capacitive Sensors
Photoelectric Sensors
Inductive Loop Detectors
Ultrasonic Sensors
Radar Sensors
Level Sensors
Limit Switches
Magnetic Switches

Solid State Relays
Contactors and Overloads
Manual Motor Starters
Motor Controllers
Variable Frequency Drives
Electromechanical Relays
Push Buttons
Buzzers
LED Pilot Lights

Energy Management
Digital Panel Meters
PID Controllers
Switching Power Supplies
Time Delay Relays
Current Monitoring Relays
Voltage Monitoring Relays
Three Phase Monitoring Relays
Current Transformers

Control Modules
Interlock Switches
Magnetic Sensors
Light Curtains
Stack Lights
Mat Systems

Dupline® Field & Installation Bus
DuplineSafe
Building Automation Systems
Elevator Systems

A Global Force in Industrial Automation

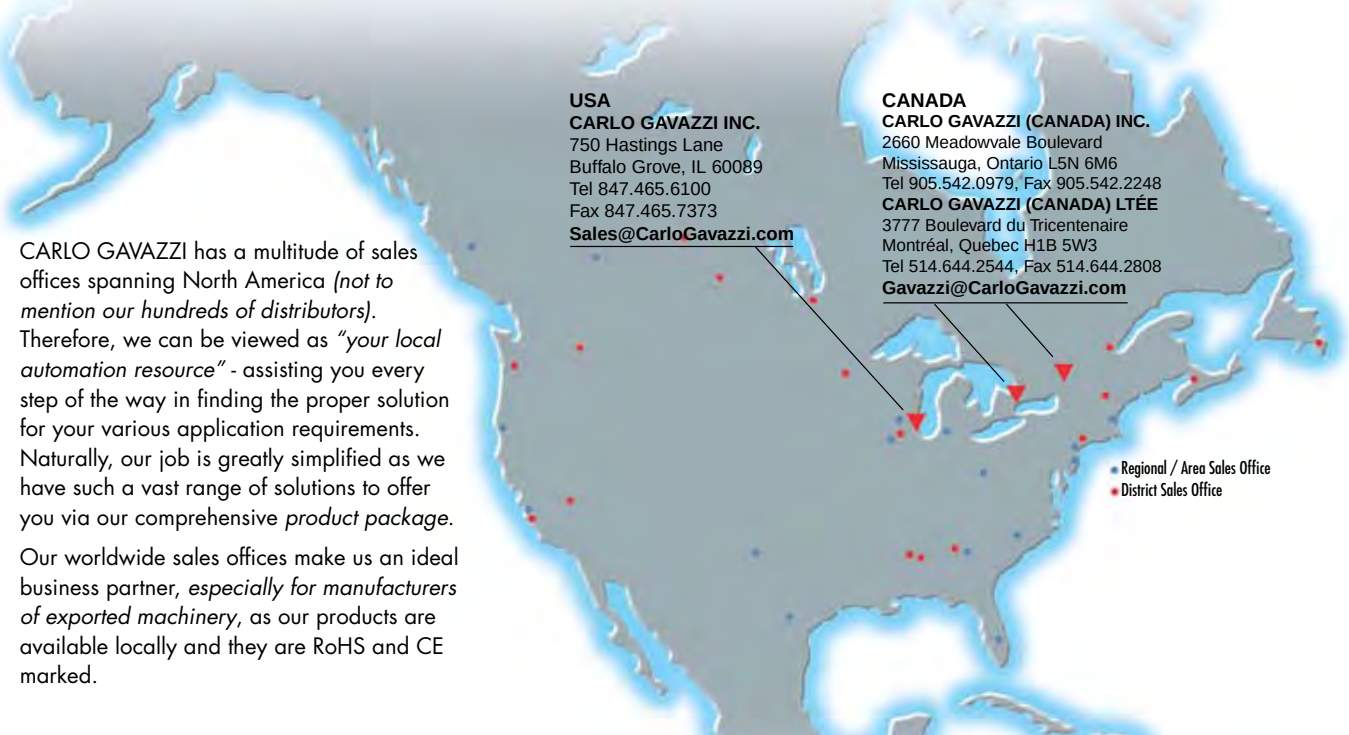

USA
CARLO GAVAZZI INC.
750 Hastings Lane
Buffalo Grove, IL 60089
Tel 847.465.6100
Fax 847.465.7373
Sales@CarloGavazzi.com

CANADA
CARLO GAVAZZI (CANADA) INC.
2660 Meadowvale Boulevard
Mississauga, Ontario L5N 6M6
Tel 905.542.0979, Fax 905.542.2248
CARLO GAVAZZI (CANADA) LTÉE
3777 Boulevard du Tricentenaire
Montréal, Quebec H1B 5W3
Tel 514.644.2544, Fax 514.644.2808
Gavazzi@CarloGavazzi.com

CARLO GAVAZZI has a multitude of sales offices spanning North America *(not to mention our hundreds of distributors)*. Therefore, we can be viewed as *"your local automation resource"* - assisting you every step of the way in finding the proper solution for your various application requirements. Naturally, our job is greatly simplified as we have such a vast range of solutions to offer you via our comprehensive *product package*.

Our worldwide sales offices make us an ideal business partner, *especially for manufacturers of exported machinery*, as our products are available locally and they are RoHS and CE marked.

Argentina • Australia • Austria • Bahrain • Belgium • Bolivia • Bosnia • Brazil • Brunei • Bulgaria • Canada
Chile • China • Columbia • Croatia • Cyprus • Czech • Denmark • Dominican Republic • Egypt • Estonia
Finland • France • Germany • Greece • Hungary • Hong Kong • Iceland • India • Indonesia • Iran • Ireland
Italy • Japan • Jordan • Kenya • Korea • Kuwait • Lebanon • Malaysia • Malta • Morocco • Mauritius • Mexico
Netherlands • New Zealand • Norway • Pakistan • Papua New Guinea • Paraguay • Peru • Philippines
Poland • Portugal • Qatar • Romania • Russia • Saudi Arabia • Serbia • Singapore • Slovakia • Slovenia
South Africa • Spain • Sultanate of Oman • Sweden • Switzerland • Taiwan • Thailand • Tunisia • Turkey
Ukraine • United Arab Emirates • United Kingdom • Uruguay • United States of America • Venezuela • Vietnam

Eos-Array Brochure 7/09

Your Authorized Distributor:

CARLO GAVAZZI
Automation Components

USA Phone: 847.465.6100 Fax: 800.222.2659
Canada Ontario: 905.542.0979 Quebec: 514.644.2544
Website www.GavazziOnline.com
Email Sales@CarloGavazzi.com

CARLO GAVAZZI

Visit our website for downloadable data sheets, brochures & pricing: www.GavazziOnline.com

Sold by AA Electric 1-800-237-8274 • Lakeland, FL • Lawrenceville, GA • East Rutherford, NJ
Web : www.A-Aelectric.com Email: njsales@a-aelectric.com